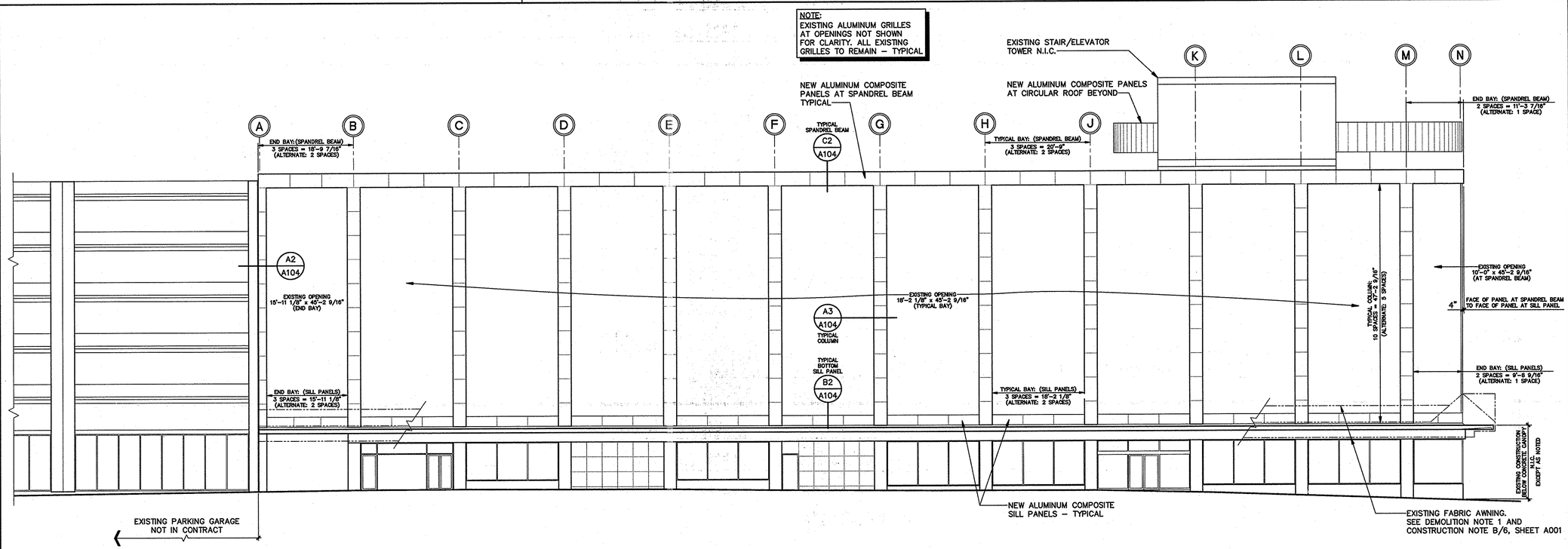

B1 SOUTH ELEVATION

SCALE: 3/32" = 1'-0"

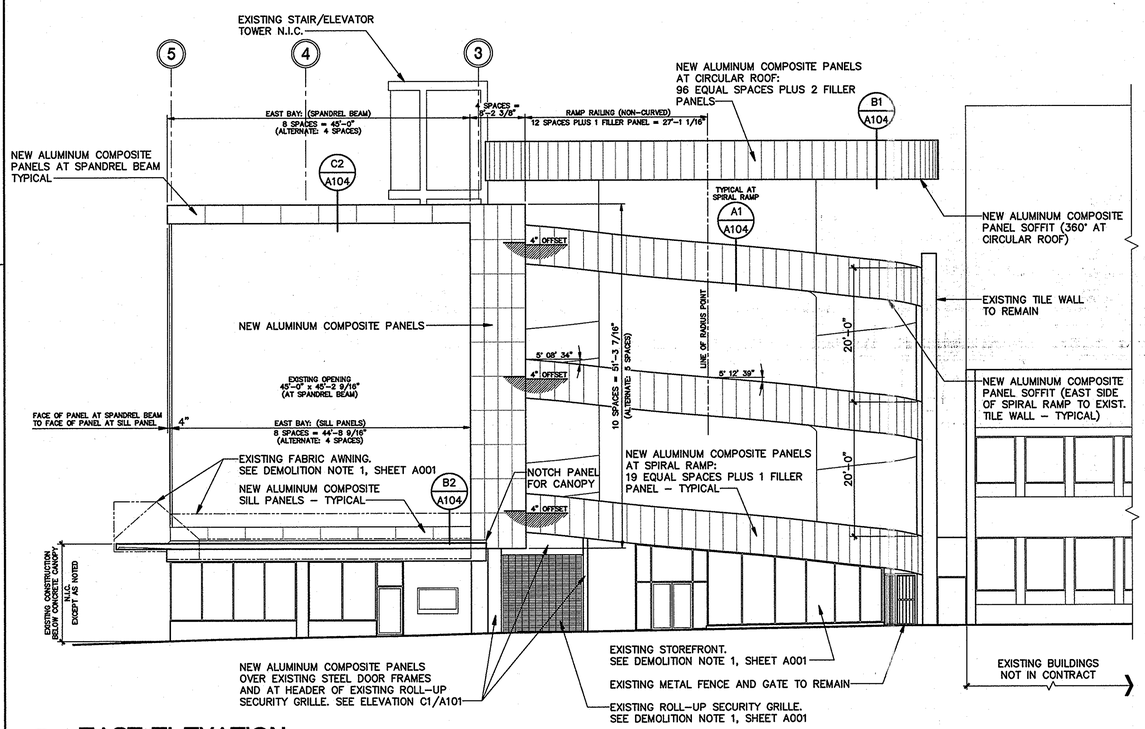

A1 EAST ELEVATION

SCALE: 3/32" = 1'-0"

NOTE:
SEE DETAILS, SHEET A104 FOR SOFFITS, TOP RETURNS, AND COLUMN RETURNS

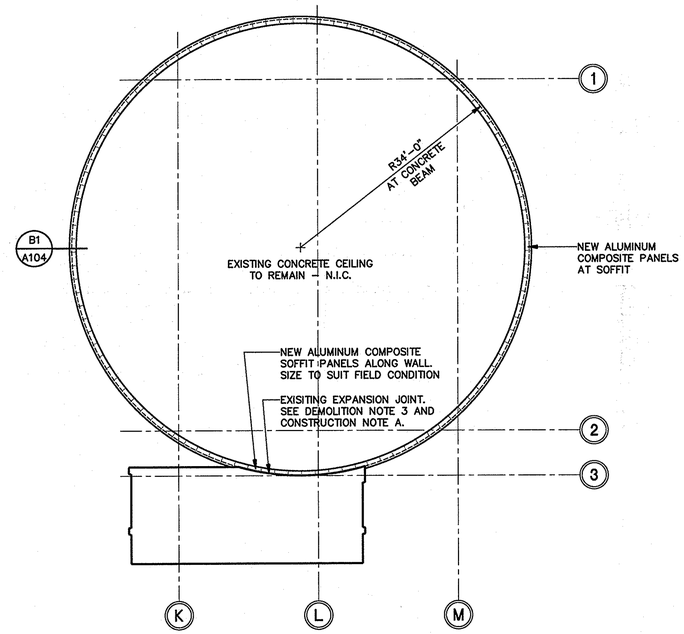

A3 REFLECTED SOFFIT PLAN AT CIRCULAR ROOF

SCALE: 3/32" = 1'-0"

AKEL □ LOGAN □ SHAFER
ARCHITECTS AND PLANNERS

704 Roselle Street / Jacksonville, Florida 32204-2942
Telephone (904) 356-2604 / Fax (904) 356-4010
www.alsarchitects.com

CONSULTANTS

1/15/09

EXTERIOR RENOVATIONS
BB&T PARKING GARAGE
100 N. HOGAN STREET
JACKSONVILLE, FLORIDA

MARK	DATE	DESCRIPTION

ISSUE:	JANUARY 15, 2009
PROJECT NO:	0713
CAD DWG FILE:	0713 DATABASE
DRAWN BY:	RPG
CHECKED BY:	GES

BID DOCUMENTS

SHEET TITLE

EXTERIOR ELEVATIONS AND REFLECTED SOFFIT PLAN AT CIRCULAR ROOF

SHEET NUMBER

A103